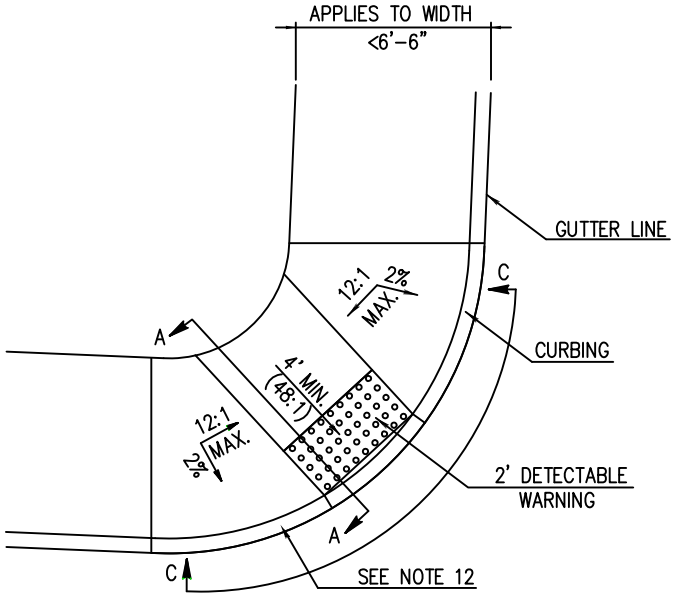

DIAGONALSIDEWALK RAMP (TYPE 4b)

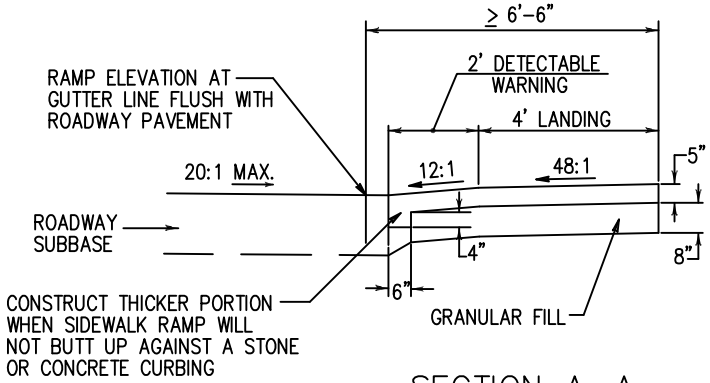

SECTION A–A

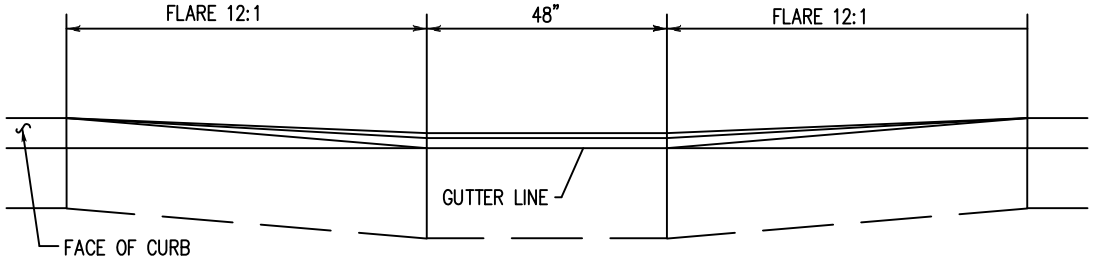

SECTION C–C

GENERAL NOTES

1. MAXIMUM SLOPES OF ADJOINING GUTTERS AND ROAD SURFACES IMMEDIATELY ADJACENT TO THE SIDEWALK RAMP OR ACCESSIBLE ROUTE SHOULD NOT EXCEED 20:1.
2. CARE SHALL BE TAKEN TO ASSURE UNIFORM GRADE ON THE RAMP, FREE OF SAGS AND ABRUPT GRADE CHANGES.
3. ALL RAMPS SHALL BE CONSTRUCTED OF CLASS "F" CONCRETE IN ACCORDANCE WITH CONNECTICUT STANDARD SPECIFICATIONS ARTICLE M.03.01.
4. SIDEWALK RAMPS SHALL HAVE A COARSE BROOM FINISH TRANSVERSE TO THE SLOPE OF THE RAMP. THE SURFACE ALONG ACCESSIBLE ROUTES SHALL BE STABLE, FIRM AND SLIP RESISTANT IN COMPLIANCE WITH ADAAG SECTION 4.5.
5. DIAGONAL SIDEWALK RAMPS AT MARKED CROSSINGS SHALL BE WHOLLY CONTAINED WITHIN THE MARKINGS, EXCLUDING ANY FLARED SIDES.
6. REMOVAL OF EXISTING SIDEWALK FOR NEW RAMP INSTALLATIONS SHALL BE TO THE NEAREST EXPANSION/CONTRACTION JOINT OR DUMMY JOINT. 12:1 MAY NOT BE ACHIEVABLE DUE TO SIDEWALK GRADE. IN RECOGNITION OF THIS, A MINIMUM LIMIT OF 15' FOR A PARALLEL RAMP SHALL BE USED. REMOVAL SHALL NOT BE FURTHER THAN 2' FROM THE PROPOSED RAMP UNLESS DIRECTED BY THE ENGINEER. SAW CUT REQUIRED FOR DUMMY JOINTS SHALL BE INCLUDED IN THE COST OF "CONCRETE SIDEWALK".
7. EXPANSION JOINTS IN CONCRETE SHALL MATCH THOSE IN ADJACENT SIDEWALKS BUT IN NO CASE SHALL THE SPACING BETWEEN EXPANSION JOINTS EXCEED 12' UNLESS OTHERWISE NOTED.
8. RAISED ISLANDS IN MARKED CROSSINGS SHALL HAVE SIDEWALK RAMPS AT BOTH SIDES AND A LEVEL AREA AT LEAST 4' LONG BETWEEN THE RAMPS. IF THIS CAN NOT BE ACHIEVED, THE RAISED ISLAND SHALL BE CUT THROUGH LEVEL WITH THE ROADWAY AS SHOWN ON THE PLANS OR AS DIRECTED BY THE ENGINEER.
9. SIDEWALK RAMPS SHALL BE CONSTRUCTED AND PAID FOR UNDER THE ITEM "CONCRETE SIDEWALK", INCLUDING CURBING WITHIN THE LIMITS OF THE NEW SIDEWALK RAMP AND DETECTABLE WARNING STRIPS.
10. CURBING WITHIN THE LIMITS OF THE NEW SIDEWALK RAMP SHALL BE CONSTRUCTED IN CONFORMANCE WITH THE REQUIREMENTS OF FORM 814A SECTIONS 8.11 AND 8.13.
11. HANDICAP RAMPS CONFORMING WITH CONNECTICUT GENERAL STATUTES, SEC. 7–118a, SHALL BE INCORPORATED IN ALL PROPOSED SIDEWALKS AT ALL STREET INTERSECTIONS, AND AT ALL OTHER LOCATIONS WHERE THE GRADE OF A DRIVEWAY OR OTHER FACILITY TAKES PRECEDENCE OVER THE GRADE OF THE PROPOSED SIDEWALK.
12. TRANSITION TO FULL HEIGHT CURB. INSTALL STONE CURBING IF ADJACENT CURBING IS STONE. INSTALL CONCRETE CURBING IF ADJACENT CURBING IS CONCRETE OR BITUMINOUS.
13. INSTALL THE EDGE OF THE DETECTABLE WARNING 6" FROM THE EDGE OF ROAD.
14. TO PERMIT WHEELCHAIR WHEELS TO ROLL BETWEEN DOMES, ALIGN DOMES ON A SQUARE GRID. IN THE DIRECTION OF PEDESTRIAN TRAVEL.

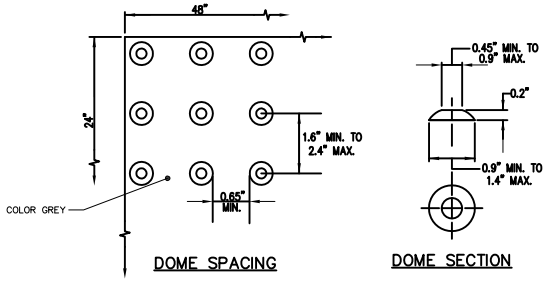

DOME SPACING

DOME SECTION

SCALE N.T.S.	CITY OF TORRINGTON Engineering Department
APPROVED	
RV. DATE AUG. 2011	DIAGONAL SIDEWALK RAMP TYPE (4b)

SECTION 2.9